MOVING YOU FURTHER

HX145LCR

With Tier 4 final / Stage IV Engine installed

*Photo may include optional equipment.

Net Power	Gross Power	Travel Speed	Operating Weight
SAE J1349 / 87 kW (116 HP) at 1,950 rpm	SAE J1995 / 92.7 kW (124 HP) at 1,950 rpm	5.5 km/hr (3.4 mph) / 3.3 km/hr (2.1 mph)	15,160 kg / 33,420 lb

HYUNDAI
CONSTRUCTION EQUIPMENT

RULE THE GROUND

The HX Series excavators are products of HHI's spirit of initiative, creativity and strong drive. HHI's engineers, who are the best in the industry, have worked tirelessly to offer a zero-defect product. The new HX Series reflects customers' needs in the field gleaned by thorough monitoring. They maximize fuel efficiency and performance proven by rigorous field tests and quality control.

*Photo may include optional equipment.

RULE THE GROUND

The HX series exceeds customers' expectation!
Become a true leader on the ground with HHI's HX series.

HX145LCR

WORK MAX, WORTH MAX

- ECO Gauge
- IPC (Intelligent Power Control)
- New Variable Power Control
- Electronic Viscous Fan Clutch
- Attachment Flow Control (Option)
- New Cooling System with Increased Air Flow
- Enlarged Air Inlet with Grill Cover
- Cycle Time Improvement

MORE RELIABLE, MORE SUSTAINABLE

- Durable Cooling Module
- Reinforced Pin, Bush and Polymer Shim
- Reinforced Durability of Upper and Lower Structure and Attachments
- Hi-grade (High-pressure) Hoses

INFOTAINMENT FRONTIER

- Intelligent and Wide Cluster
- Wi-Fi Direct with Smart Phone (Miracast)
- Proportional Auxiliary Hydraulic System
- New Audio System
- New Air Conditioning System

MODERN COMFORT, SIMPLE AND SAFE SOLUTION

- Easy Access to DEF/AdBlue® Supply System
- Hi MATE (Remote Management System) (Option)
- Viscous Suspension Mount
- Swing Lock System (Option)
- Fine Swing Control (Option)

*Photo may include optional equipment.

*Photo may include optional equipment.

Cycle Time Improvement

The HX Series provides higher productivity on the site by faster operation.

WORK MAX, WORTH MAX

Fuel Efficient System, Allows Great Performance

The HX Series has an eco-friendly, high-performance engine which ensures both excellent fuel efficiency and high power. With outstanding operating performance proven by rigorous tests at various work sites, it will satisfy any customer's needs.

ECO Gauge

ECO Gauge enable economic operation of machines. The gauge level and color displays engine torque and fuel efficiency level. On top of that, the status of fuel consumption such as average rate and the total amount of fuel consumed are displayed. Hourly and daily based fuel consumption can be checked in the detailed menu as well.

IPC (Intelligent Power Control)

The IPC controls power control depending on work environments. Its mode can be selected and released on the monitor. On the excavation mode, pump flow can be easily controlled by a lever, reducing fuel consumption.

Attachment Flow Control

The HX Series improves pump flow rate by independent control of two pumps. It optimizes attachments for effective flow rate setting depending on attachments (ten breaker types and ten crusher types), enabling various operations matching the site environments.

New Variable Power Control

The HX Series minimizes equipment input and output control signals to improve fuel efficiency. Its three-stage Power mode ensures the highest performance in any operating environment.

* P (power) mode: Maximizes speed and power of the equipment for heavy load work.
* S (standard) mode: Optimizes performance and fuel efficiency of the equipment for general load work.
* E (economy) mode: Improves the control system for light load work.

Electronic Viscous Fan Clutch

The electronic fan clutch reduces noise during operation by precisely controlling RPM depending on the hydraulic oil and coolant temperature of the working vehicle, and minimizes fuel consumption. It is also possible to shorten the warm up time of hydraulic oil.

Enlarged Air Inlet with Grill Cover

Enlarged vent hole of the air inlet side cover and fine net grill to prevent penetration of foreign materials further improve durability.

MORE RELIABLE, MORE SUSTAINABLE

New Exterior Design for Robustness and Safety

The true value of the HX Series lies in its durability. The robust upper and lower frame structure that can endure external shock and high-load work and the attachments whose performance was proven by rigorous tests further show the real value of the HX Series in tough working environments and promise higher productivity.

Durable Cooling Module

The HX Series has a durable cooling module that passed stringent tests, demonstrating the highest productivity in tough working environments.

Reinforced Pin, Bush and Polymer Shim

The HX series improves lubricity of connecting parts between the equipment and attachments. Gaps with attachments are minimized by wear-resistant long-life pins, bushes and polymer shims, supporting the highest performance with invariable durability.

Reinforced Durability of Upper and Lower Structure and Attachments

The upper and lower structure and attachments of the HX Series have higher durability than demanded on the site, as proven through numerous tests including road tests and virtual simulation. The wear resistance of the bucket has been improved by use of new material.

*Photo may include optional equipment.

Hi-grade (High-pressure) Hoses

The HX Series uses high-pressure hoses with improved heat and pressure resistance, greatly increasing the durability of the equipment.

310 mm
(9 Series)

340 mm
(HX Series)

Cabin space for drivers increased by

13 %

(Compared to 9 Series)

*Photo may include optional equipment.

INFOTAINMENT FRONTIER

Enhanced Instrument Panel for Easier Monitoring

Many electronic functions are concentrated on the most convenient spot for operators to ensure work efficiency. The highly-advanced infotainment system, a product of HHI's intensive information technology, enables both productivity and pleasant work at the same time! The HX Series of HHI provides higher value and pleasure to customers.

Intelligent and Wide Cluster

The 8-inch capacitive-type display (like smartphone display) of the HX Series is 30% larger than the previous model, delivering excellent legibility. The centralized switches on the display allow convenience of checking the urea level and temperature outside the cabin. The audio AUX, air conditioner, heater interoperation and inclination sensor also maximize operator's convenience.

Wi-Fi Direct with Smart Phone (Miracast)

The Miracast system based on Wi-Fi of the operator's smart phone enables easy and convenient use of various features of the smart phone on the big screen including navigation, web surfing, viewing of videos, and listening to music. (For Android mobile phone now)

Proportional Auxiliary Hydraulic System

· Opt: Proportional control switch for better speed control
· Enlarge the operation convenience

New Audio System

Radio player, USB-based MP3 player, integrated Bluetooth hands-free feature, and built-in microphone allow convenient phone calls while in work and in transit.

MODERN COMFORT, SIMPLE AND SAFE SOLUTION

New Cabin for More Comfort

Low noise, low vibration, and ergonomic design make the cabin space more comfortable and pleasant! With focus on safety and convenience of operators, the HX Series allows rapid and safe equipment inspection anytime and anywhere, providing an optimal environment for operators to work.

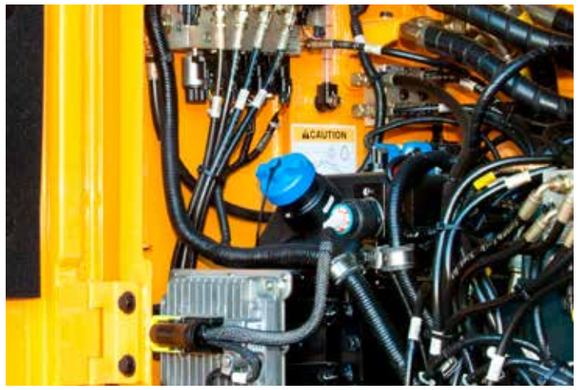

Easy Access to DEF/AdBlue® Supply System

The DEF/AdBlue® tank is installed inside the tool box and its inlet is remotely located for easy access and convenient supply. Warning of overfill is given by a red lamp signal. The DEF/AdBlue® supply module is attached on the side of the fuel tank for easy maintenance and filter replacement.

Hi MATE (Remote Management System)

Hi MATE, Hyundai's proprietary remote management system, provides operators and dealer service personnel access to vital service and diagnostic information on the machine from any computer with internet access. Users can pinpoint machine location using digital mapping and set machine work boundaries, reducing the need for multiple service calls. Hi MATE saves time and money for the owner and dealer by promoting preventative maintenance and reducing machine downtime.

* Operation of the system may be affected by the condition of telecommunication signal

*Photo may include optional equipment

Swing Lock System (Option)

Swing Lock System is provided to maintain stability when swing movement needs to be limited, improving operating speed and productivity.

Fine Swing Control (Option)

Fine swing control is available for customer's convenience when users want to control fine swing.

SPECIFICATIONS

ENGINE

Maker / Model			Perkins 1204F
Type			Water-cooled, 4-cycle diesel, 4-cylinder inline, Direct injection, Turbocharged, Charge and air cooled
Rated flywheel horse power	SAE	J1995 (gross)	92.7 kW (124 HP) at 1,950 rpm
		J1349 (net)	87 kW (116 HP) at 1,950 rpm
	DIN	6271/1 (gross)	92.7 kW (126 PS) at 1,950 rpm
		6271/1 (net)	87 kW (118 PS) at 1,950 rpm
Max. torque			54.0 kgf·m (391 lbf·ft) at 1,400 rpm
Bore × stroke			105 × 127 mm (4.1" × 5.0")
Piston displacement			4,400 cc (268.5 cu in)
Batteries			2 × 12 V × 100 Ah
Starting motor			24 V - 4.5 kW
Alternator			24 V - 100 A

HYDRAULIC SYSTEM

MAIN PUMP

Type	Variable displacement tandem axis piston pumps
Max. flow	2 × 126.8 ℓ/min (33.5 US gpm / 27.9 UK gpm)
Sub-pump for pilot circuit	Gear pump

Cross-sensing and fuel saving pump system

HYDRAULIC MOTORS

Travel	Two speed axial pistons motor with brake valve and parking brake
Swing	Axial piston motor with automatic brake

RELIEF VALVE SETTING

Implement circuits	350 kgf/cm² (4,980 psi)
Travel	350 kgf/cm² (4,980 psi)
Power boost (boom, arm, bucket)	380 kgf/cm² (5,410 psi)
Swing circuit	285 kgf/cm² (4,050 psi)
Pilot circuit	40 kgf/cm² (570 psi)
Service valve	Installed

HYDRAULIC CYLINDERS

No. of cylinder bore × stroke	Boom: 2-105 × 1,105 mm (4.1" X 43.5")
	Arm: 1-115 × 1,138 mm (4.5" X 44.8")
	Bucket: 1-100 × 850 mm (3.9" X 33.1")
	Dozer Blade: 2-100 × 250 mm (3.9" x 9.8")
	2-Piece Boom: 1st: 2-105 x 995 mm (4.1" x 39.2") 2nd: 1-145 x 613 mm (5.7" x 24.1")

DRIVES & BRAKES

Drive method	Fully hydrostatic type
Drive motor	Axial piston motor, in-shoe design
Reduction system	Planetary reduction gear
Max. drawbar pull	12,000 kgf (26,455 lbf)
Max. travel speed (high / low)	5.5 km/hr (3.4 mph) / 3.3 km/hr (2.1 mph)
Gradeability	35° (70%)
Parking brake	Multi wet disc

CONTROL

Pilot pressure operated joysticks and pedals with detachable lever provide almost effortless and fatigueless operation.

Pilot control	Two joysticks with one safety lever (LH): Swing and arm (RH): Boom and bucket (ISO)
Traveling and steering	Two levers with pedals
Engine throttle	Electric, Dial type

SWING SYSTEM

Swing motor	Fixed displacement axial piston motor
Swing reduction	Planetary gear reduction
Swing bearing lubrication	Grease-bathed
Swing brake	Multi wet disc
Swing speed	11.2 rpm

SERVICE REFILL CAPACITIES

( ): option

Re-filling	liter	US gal	UK gal
Fuel tank	265	70.0	58.3
Engine coolant	14.5	3.8	3.2
Engine oil	10.5	2.8	2.3
Swing device	3.5 (2.5)	0.9 (0.7)	0.7 (0.5)
Final drive (each)	2.3	0.6	0.5
Hydraulic system (including tank)	180	47.6	39.6
Hydraulic tank	96	25.4	21.1
DEF/AdBlue® tank	19	5.0	4.2

UNDERCARRIAGE

The X-leg type center frame is integrally welded with reinforced box-section track frames. The undercarriage includes lubricated rollers, idlers, track adjusters with shock absorbing springs and sprockets and a track chain with double or triple grouser shoes.

Center frame	X - leg type
Track frame	Pentagonal box type
No. of shoes on each side	47 EA
No. of carrier roller on each side	2 EA
No. of track roller on each side	7 EA
No. of rail guard on each side	1 EA

OPERATING WEIGHT (APPROXIMATE)

Operating weight, including 4,600 mm (15' 1") boom; 2,500 mm (8' 2") arm; SAE heaped 0.52 m³ (0.68 yd³) bucket, lubricant, coolant, full fuel tank, full hydraulic tank and all standard equipments.

OPERATING WEIGHT

Shoes		Operating weight		Ground pressure
Type	Width mm (in)	kg (lb)		kgf / cm² (psi)
Triple grouser	500 (20")	HX145LCR	14,950 (32,960)	0.45 (6.40)
		HX145LCR (Dozer type)	15,750 (34,720)	0.47 (6.68)
	600 (24")	HX145LCR	15,160 (33,420)	0.38 (5.40)
		HX145LCR (Dozer type)	15,960 (35,190)	0.40 (5.69)
	700 (28")	HX145LCR	15,370 (33,880)	0.33 (4.69)
		HX145LCR (Dozer type)	16,170 (35,650)	0.35 (4.98)

BUCKET SELECTION GUIDE & DIGGING FORCE

BUCKETS

All buckets are welded with high-strength steel.

SAE heaped m³ (yd³)	0.23 (0.30)	0.40 (0.52) 0.46 (0.60)	0.52 (0.68) 0.58 (0.76)	0.65 (0.85)	0.71 (0.93)	⦿ 0.45 (0.59)	★ 0.55 (0.72)

Capacity m³ (yd³)		Width mm (in)		Weight kg (lb)	Recommendation mm (ft.in)					
					4,600 (15' 1") Mono-boom				4,900 (16' 1") 2-Piece boom	
SAE heaped	CECE heaped	Without side cutters	With side cutters		1,900 (6' 3") Arm	2,100 (6' 11") Arm	2,500 (8' 2") Arm	3,000 (9' 10") Arm	2,100 (6'11") Arm	2,500 (8' 2") Arm
0.23 (0.30)	0.20 (0.26)	520 (20.5)	620 (24.4)	335 (740)	●	●	●	■	●	●
0.40 (0.52)	0.35 (0.46)	750 (29.5)	850 (33.5)	410 (900)	●	●	●	■	●	●
0.46 (0.60)	0.40 (0.52)	840 (33.1)	940 (37.0)	435 (960)	●	●	●	▲	●	■
0.52 (0.68)	0.45 (0.59)	915 (36.0)	1,015 (40.0)	460 (1,010)	●	●	●	-	■	■
0.58 (0.76)	0.50 (0.65)	1,000 (39.4)	1,100 (43.3)	480 (1,060)	●	●	■	-	■	▲
0.65 (0.85)	0.55 (0.72)	1,105 (43.5)	1,205 (47.4)	500 (1,100)	■	■	▲	-	▲	-
0.71 (0.93)	0.60 (0.78)	1,190 (46.9)	1,290 (50.8)	540 (1,190)	▲	▲	-	-	-	-
▣ 0.45 (0.59)	0.40 (0.52)	1,520 (59.8)	-	410 (900)	●	●	■	-	●	■
⦿ 0.55 (0.72)	0.45 (0.59)	1,800 (70.9)	-	585 (1,290)	■	▲	▲	-	■	▲

▣ Ditching bucket
⦿ Slope finishing bucket

● : Applicable for materials with density of 2,000 kg /m³ (3,370 lb/ yd³) or less
■ : Applicable for materials with density of 1,600 kg /m³ (2,700 lb/ yd³) or less
▲ : Applicable for materials with density of 1,100 kg /m³ (1,850 lb/ yd³) or less

ATTACHMENT

Booms and arms are welded with a low-stress, full-box section design.
4.6 m (15' 1") Mono-boom and 4.9 m (16' 1") 2-Piece boom and 1.9 m (6' 3"); 2.1 m (6' 11"); 2.5 m (8' 2") & 3.0 m (9' 10") Arms are available.

DIGGING FORCE

Arm	Length	mm (ft.in)	1,900 (6' 3")	2,100 (6' 11")	2,500 (8' 2")	3,000 (9' 10")	Remarks:
	Weight	kg (lb)	560 (1,230)	580 (1,280)	610 (1,340)	670 (1,480)	
Bucket digging force	SAE	kN	87.3 [94.8]	87.3 [94.8]	87.3 [94.8]	87.3 [94.8]	[ ]: Power Boost
		kgf	8,900 [9,660]	8,900 [9,660]	8,900 [9,660]	8,900 [9,660]	
		lbf	19,620 [21,300]	19,620 [21,300]	19,620 [21,300]	19,620 [21,300]	
	ISO	kN	102 [110.8]	102 [110.8]	102 [110.8]	102 [110.8]	
		kgf	10,400 [11,290]	10,400 [11,290]	10,400 [11,290]	10,400 [11,290]	
		lbf	22,930 [24,890]	22,930 [24,890]	22,930 [24,890]	22,930 [24,890]	
Arm crowd force	SAE	kN	76.5 [83.1]	73.6 [79.9]	62.8 [68.2]	55.9 [60.7]	
		kgf	7,800 [8,470]	7,500 [8,140]	6,400 [6,950]	5,700 [6,190]	
		lbf	17,200 [18,670]	16,530 [17,950]	14,110 [15,320]	12,570 [13,640]	
	ISO	kN	80.4 [87.3]	77.5 [84.1]	65.7 [71.4]	57.9 [62.8]	
		kgf	8,200 [8,900]	7,900 [8,580]	6,700 [7,270]	5,900 [6,410]	
		lbf	18,080 [19,630]	17,420 [18,910]	14,770 [16,040]	13,010 [14,120]	

Note : Arm weight includes bucket cylinder, linkage and pin

DIMENSIONS & WORKING RANGE

HX145LCR DIMENSIONS

4.6 m (15' 1") Mono-boom and 2.1 m (6' 11"), 2.5 m (8' 2") & 3.0 m (9' 10") Arm.

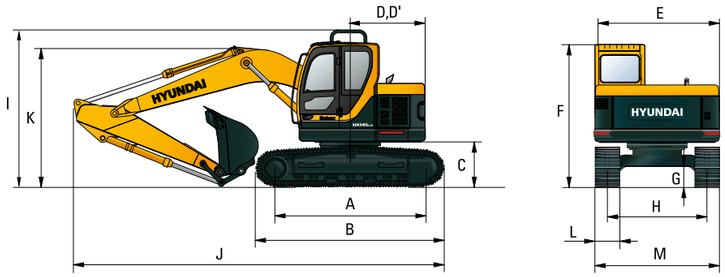

Unit : mm (ft·in)

A	Tumbler distance	3,090 (10' 2")
B	Overall length of crawler	3,798 (12' 4")
C	Ground clearance of counterweight	930 (3' 1")
D	Tail swing radius	1,500 (4' 11")
D'	Rear-end length	1,500 (4' 11")
E	Overall width of upperstructure	2,500 (8' 2")
F	Overall height of cab	2,900 (9' 6")
G	Min. ground clearance	440 (1' 5")
H	Track gauge	2,000 (6' 7")
I	Overall height of guardrail	3,215 (10' 7")

	Boom length	4,600 (15' 1")			
	Arm length	1,900 (6' 3")	2,100 (6' 11")	2,500 (8' 2")	3,000 (9' 10")
J	Overall length	7,380 (24' 3")	7,400 (24' 3")	7,360 (24' 2")	7,300 (23' 11")
K	Overall height of boom	2,630 (8' 8")	2,710 (8' 11")	2,860 (9' 5")	3,210 (10' 6")
L	Track shoe width	500 (20")	600 (24")	700 (28")	
M	Overall width	2,500 (8' 2")	2,600 (8' 6")	2,700 (8' 10")	

HX145LCR WORKING RANGE

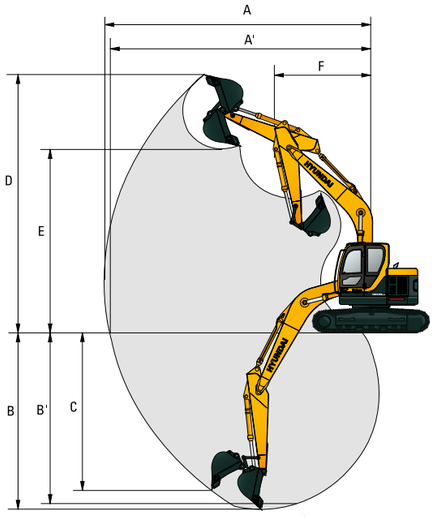

Unit : mm (ft·in)

	Boom length	4,600 (15' 1")			
	Arm length	1,900 (6' 3")	2,100 (6' 11")	2,500 (8' 2")	3,000 (9' 10")
A	Max. digging reach	7,730 (25' 4")	7,900 (25' 11")	8,310 (27' 3")	8,770 (28' 9")
A'	Max. digging reach on ground	7,580 (24' 10")	7,750 (25' 0")	8,170 (26' 10")	8,630 (28' 4")
B	Max. digging depth	4,890 (16' 1")	5,100 (16' 9")	5,500 (18' 1")	5,990 (19' 8")
B'	Max. digging depth (8' level)	4,640 (15' 3")	4,870 (16' 0")	5,290 (17' 4")	5,810 (19' 1")
C	Max. vertical wall digging depth	4,400 (14' 5")	4,600 (15' 1")	5,000 (16' 5")	5,400 (17' 9")
D	Max. digging height	8,840 (29' 0")	8,970 (29' 5")	9,350 (30' 8")	9,730 (31' 11")
E	Max. dumping height	6,350 (20' 10")	6,470 (21' 3")	6,850 (22' 6")	7,230 (23' 9")
F	Min. front swing radius	1,860 (6' 1")	2,030 (6' 8")	1,980 (6' 6")	2,260 (7' 5")

DIMENSIONS & WORKING RANGE

HX145LCR (DOZER TYPE) DIMENSIONS

4.6 m (15' 1") Mono-boom and 1.9 m (6' 3"), 2.1 m (6' 11"), 2.5 m (8' 2") & 3.0 m (9' 10") Arm.

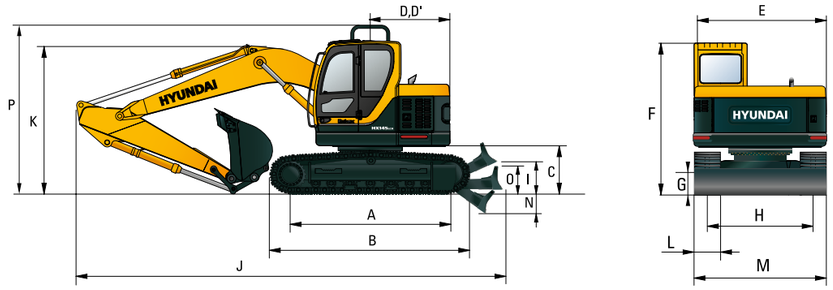

Unit : mm (ft·in)

A	Tumbler distance	3,090 (10' 2")
B	Overall length of crawler	3,798 (12' 4")
C	Ground clearance of counterweight	930 (3' 1")
D	Tail swing radius	1,500 (4' 11")
D'	Rear-end length	1,500 (4' 11")
E	Overall width of upperstructure	2,500 (8' 2")
F	Overall height of cab	2,900 (9' 6")
G	Min. ground clearance	440 (1' 5")
H	Track gauge	2,000 (6' 7")
I	Ground clearance of blade up	420 (1' 4")
N	Depth of blade down	430 (1' 4")
O	Height of blade	575 (1' 8")
P	Overall height of guardrail	3,215 (10' 7")

	Boom length	4,600 (15' 1")			
	Arm length	1,900 (6' 3")	2,100 (6' 11")	2,500 (8' 2")	3,000 (9' 10")
J	Overall length	7,840 (25' 9")	7,860 (25' 9")	7,820 (25' 8")	7,760 (25' 6")
K	Overall height of boom	2,630 (8' 8")	2,710 (8' 11")	2,860 (9' 5")	3,210 (10' 6")
L	Track shoe width	500 (20")	600 (24")	700 (28")	
M	Overall width	2,500 (8' 2")	2,600 (8' 6")	2,700 (8' 10")	

HX145LCR (DOZER TYPE) WORKING RANGE

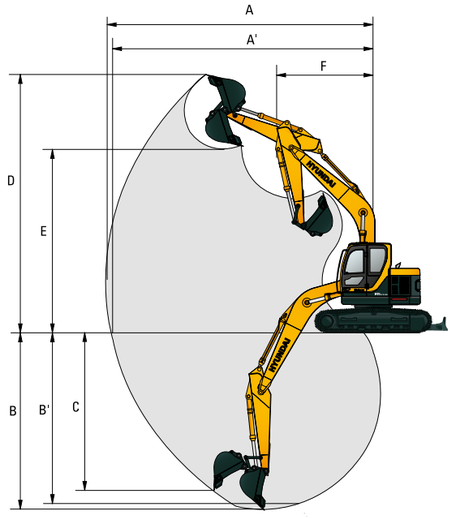

Unit : mm (ft·in)

	Boom length	4,600 (15' 1")			
	Arm length	1,900 (6' 3")	2,100 (6' 11")	2,500 (8' 2")	3,000 (9' 10")
A	Max. digging reach	7,730 (25' 4")	7,900 (25' 11")	8,310 (27' 3")	8,770 (28' 9")
A'	Max. digging reach on ground	7,580 (24' 10")	7,750 (25' 0")	8,170 (26' 10")	8,630 (28' 4")
B	Max. digging depth	4,890 (16' 1")	5,100 (16' 9")	5,500 (18' 1")	5,990 (19' 8")
B'	Max. digging depth (8' level)	4,640 (15' 3")	4,870 (16' 0")	5,290 (17' 4")	5,810 (19' 1")
C	Max. vertical wall digging depth	4,400 (14' 5")	4,600 (15' 1")	5,000 (16' 5")	5,400 (17' 9")
D	Max. digging height	8,840 (29' 0")	8,970 (29' 5")	9,350 (30' 8")	9,730 (31' 11")
E	Max. dumping height	6,350 (20' 10")	6,470 (21' 3")	6,850 (22' 6")	7,230 (23' 9")
F	Min. front swing radius	1,860 (6' 1")	2,030 (6' 8")	1,980 (6' 6")	2,260 (7' 5")

DIMENSIONS & WORKING RANGE

HX145LCR 2-PIECE DIMENSIONS

4.9 m (16' 1") 2-piece boom and 2.1 m (6' 11"), 2.5 m (8' 2"), 3.05 m (10' 0") & 3.6 m (11' 10") Arm.

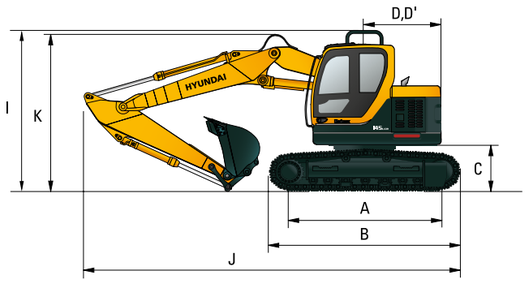

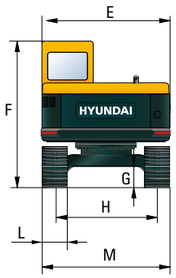

Unit : mm (ft·in)

A	Tumbler distance	2,910 (9' 7")
B	Overall length of crawler	3,618 (11' 8")
C	Ground clearance of counterweight	930 (3' 1")
D	Tail swing radius	1,500 (4' 11")
D'	Rear-end length	1,500 (4' 11")
E	Overall width of upperstructure	2,500 (8' 2")
F	Overall height of cab	2,900 (9' 6")
G	Min. ground clearance	440 (1' 5")
H	Track gauge	2,000 (6' 7")
I	Overall height of guardrail	3,215 (10' 7")

	Boom length	4,900 (16' 1") 2-Piece		
	Arm length	2,100 (6' 11")		2,500 (8' 2")
J	Overall length	7,720 (25' 4")		7,690 (25' 3")
K	Overall height of boom	2,870 (9' 5")		2,900 (9' 6")
L	Track shoe width	500 (20")	600 (24")	700 (28")
M	Overall width	2,500 (8' 2")	2,600 (8' 6")	2,700 (8' 10")

HX145LCR 2-PIECE WORKING RANGE

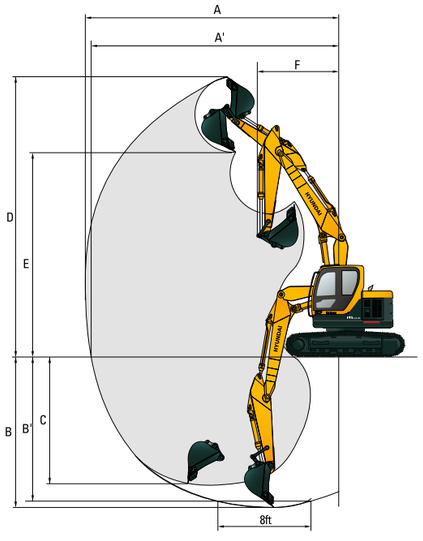

Unit : mm (ft·in)

	Boom length	4,900 (16' 1") 2-Piece	
	Arm length	2,100 (6' 11")	2,500 (8' 2")
A	Max. digging reach	8,270 (27' 2")	8,675 (28' 6")
A'	Max. digging reach on ground	8,130 (26' 8")	8,540 (28' 0")
B	Max. digging depth	5,175 (16' 12")	5,580 (18' 4")
B'	Max. digging depth (8' level)	5,060 (16' 7")	5,470 (17' 11")
C	Max. vertical wall digging depth	4,555 (14' 11")	5,015 (16' 5")
D	Max. digging height	9,340 (30' 8")	9,715 (31' 10")
E	Max. dumping height	6,850 (22' 6")	7,230 (23' 9")
F	Min. front swing radius	2,300 (7' 7")	2,250 (7' 5")

DIMENSIONS & WORKING RANGE

HX145LCR 2-PIECE (DOZER TYPE) DIMENSIONS

4.9 m (16' 1") 2-piece boom and 2.1 m (6' 11") & 2.5 m (8' 2") Arm.

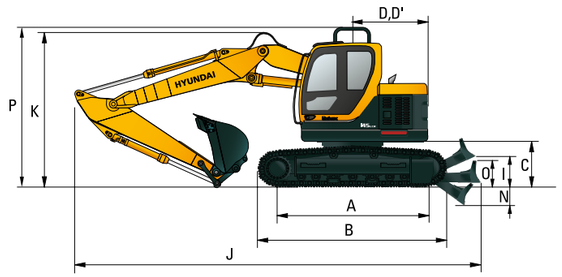

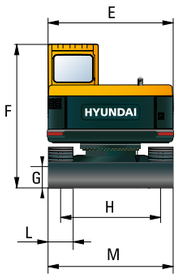

Unit : mm (ft·in)

A	Tumbler distance	3,090 (10' 2")
B	Overall length of crawler	3,798 (12' 4")
C	Ground clearance of counterweight	930 (3' 1")
D	Tail swing radius	1,500 (4' 11")
D'	Rear-end length	1,500 (4' 11")
E	Overall width of upperstructure	2,500 (8' 2")
F	Overall height of cab	2,900 (9' 6")
G	Min. ground clearance	440 (1' 5")
H	Track gauge	2,000 (6' 7")
I	Ground clearance of blade up	410 (1' 4")
N	Depth of blade down	450 (1' 5")
O	Height of blade	575 (1' 8")
P	Overall height of guardrail	3,215 (10' 7")

	Boom length	4,900 (16' 1") 2-Piece		
	Arm length	2,100 (6' 11")		2,500 (8' 2")
J	Overall length	8,180 (26' 10")		8,150 (26' 9")
K	Overall height of boom	2,870 (9' 5")		2,900 (9' 6")
L	Track shoe width	500 (20")	600 (24")	700 (28")
M	Overall width	2,500 (8' 2")	2,600 (8' 6")	2,700 (8' 10")

HX145LCR 2-PIECE (DOZER TYPE) WORKING RANGE

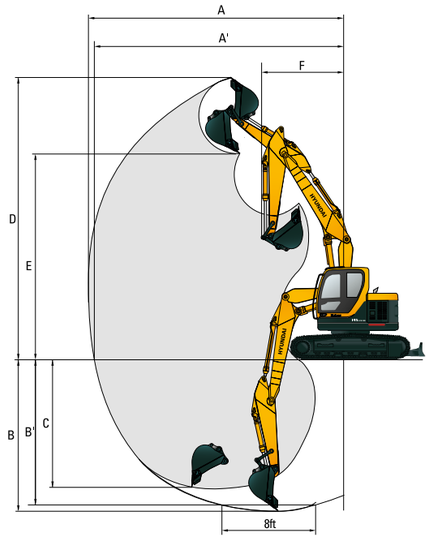

Unit : mm (ft·in)

	Boom length	4,900 (16' 1") 2-Piece	
	Arm length	2,100 (6' 11")	2,500 (8' 2")
A	Max. digging reach	8,270 (27' 2")	8,675 (28' 6")
A'	Max. digging reach on ground	8,130 (26' 8")	8,540 (28' 0")
B	Max. digging depth	5,175 (16' 12")	5,580 (18' 4")
B'	Max. digging depth (8' level)	5,060 (16' 7")	5,470 (17' 11")
C	Max. vertical wall digging depth	4,555 (14' 11")	5,015 (16' 5")
D	Max. digging height	9,340 (30' 8")	9,715 (31' 10")
E	Max. dumping height	6,850 (22' 6")	7,230 (23' 9")
F	Min. front swing radius	2,300 (7' 7")	2,250 (7' 5")

LIFTING CAPACITY

Rating over-front | Rating over-side or 360 degrees

HX145LCR

Boom: 4.6 m (15' 1") / Arm: 1.9 m (6' 3") / Bucket: 0.52 m³ (0.68 yd³) SAE heaped / Shoe: 600 mm (24") triple grouser with 2,800 kg (6,170 lb) counterweight.

Load point height m (ft)		Load radius								At max. reach		
		1.5 m (5 ft)		3.0 m (10 ft)		4.5 m (15 ft)		6.0 m (20 ft)		Capacity		Reach
												m (ft)
6.0 m	kg					*3240	*3240			*3720	2200	5.75
(20 ft)	lb					*7140	*7140			*8200	4850	(18.9)
4.5 m	kg			*5040	*5040	*4330	3340			2830	1600	6.73
(15 ft)	lb			*11110	*11110	*9550	7360			6240	3530	(22.1)
3.0 m	kg			*7250	6120	*5010	3140	3370	1910	2460	1360	7.22
(10 ft)	lb			*15980	13490	*11050	6920	7430	4210	5420	3000	(23.7)
1.5 m	kg			*9050	5370	5240	2890	3260	1810	2350	1280	7.32
(5 ft)	lb			*19950	11840	11550	6370	7190	3990	5180	2820	(24.0)
Ground Line	kg			*8630	5110	5050	2720	3180	1740	2470	1340	7.06
	lb			*19030	11270	11130	6000	7010	3840	5450	2950	(23.2)
-1.5 m	kg	*6890	*6890	*8100	5120	4990	2670			2900	1590	6.40
(-5 ft)	lb	*15190	*15190	*17860	11290	11000	5890			6390	3510	(21.0)
-3.0 m	kg			*5970	5250	*4070	2740			*2250	*2250	5.12
(-10 ft)	lb			*13160	11570	*8970	6040			*4960	*4960	(16.8)

Boom: 4.6 m (15' 1") / Arm: 2.1 m (6' 11") / Bucket: 0.52 m³ (0.68 yd³) SAE heaped / Shoe: 600 mm (24") triple grouser with 2,800 kg (6,170 lb) counterweight.

Load point height m (ft)		Load radius								At max. reach		
		1.5 m (5 ft)		3.0 m (10 ft)		4.5 m (15 ft)		6.0 m (20 ft)		Capacity		Reach
												m (ft)
6.0 m	kg					*3440	3420			3550	2070	5.98
(20 ft)	lb					*7580	7540			7830	4560	(19.6)
4.5 m	kg			*4410	*4410	*4150	3360	*2550	1970	2700	1520	6.92
(15 ft)	lb			*9720	*9720	*9150	7410	*5620	4340	5950	3350	(22.7)
3.0 m	kg			*6880	6200	*4840	3150	3370	1910	2360	1290	7.39
(10 ft)	lb			*15170	13670	*10670	6940	7430	4210	5200	2840	(24.2)
1.5 m	kg			*9010	5410	5250	2890	3260	1810	2260	1220	7.49
(5 ft)	lb			*19860	11930	11570	6370	7190	3990	4980	2690	(24.6)
Ground Line	kg			*8880	5090	5030	2700	3160	1720	2360	1270	7.24
	lb			*19580	11220	11090	5950	6970	3790	5200	2800	(23.8)
-1.5 m	kg	*6570	*6570	*8330	5060	4950	2630	3130	1690	2740	1490	6.60
(-5 ft)	lb	*14480	*14480	*18360	11160	10910	5800	6900	3730	6040	3280	(21.7)
-3.0 m	kg	*9010	*9010	*6340	5170	*4340	2680			*2390	2140	5.38
(-10 ft)	lb	*19860	*19860	*13980	11400	*9570	5910			*5270	4720	(17.7)

Boom: 4.6 m (15' 1") / Arm: 2.5 m (8' 2") / Bucket: 0.52 m³ (0.68 yd³) SAE heaped / Shoe: 600 mm (24") triple grouser with 2,800 kg (6,170 lb) counterweight.

Load point height m (ft)		Load radius								At max. reach		
		1.5 m (5 ft)		3.0 m (10 ft)		4.5 m (15 ft)		6.0 m (20 ft)		Capacity		Reach
												m (ft)
6.0 m	kg					*2960	*2960			*2920	1750	6.50
(20 ft)	lb					*6530	*6530			*6440	3860	(21.3)
4.5 m	kg					*3480	3400	*2670	1990	2400	1330	7.37
(15 ft)	lb					*7670	7500	*5890	4390	5290	2930	(24.2)
3.0 m	kg			*6110	*6110	*4490	3180	3380	1910	2120	1140	7.81
(10 ft)	lb			*13470	*13470	*9900	7010	7450	4210	4670	2510	(25.6)
1.5 m	kg			*8480	5520	5260	2890	3240	1790	2040	1070	7.90
(5 ft)	lb			*18700	12170	11600	6370	7140	3950	4500	2360	(25.9)
Ground Line	kg			*9170	5070	5010	2670	3130	1690	2110	1110	7.67
	lb			*20220	11180	11050	5890	6900	3730	4650	2450	(25.2)
-1.5 m	kg	*5880	*5880	*8680	4960	4890	2570	3070	1640	2410	1280	7.07
(-5 ft)	lb	*12960	*12960	*19140	10930	10780	5670	6770	3620	5310	2820	(23.2)
-3.0 m	kg	*8960	*8960	*7000	5040	*4750	2590			*2400	1760	5.97
(-10 ft)	lb	*19750	*19750	*15430	11110	*10470	5710			*5290	3880	(19.6)
-4.5 m	kg			*3710	*3710							
(-15 ft)	lb			*8180	*8180							

1. Lifting capacity are based on SAE J1097 and ISO 10567.
2. Lifting capacity of the HX series does not exceed 75% of tipping load with the machine on firm, level ground or 87% of full hydraulic capacity.
3. The load point is a hook (standard equipment) located on the back of the bucket.
4. (*) indicates load limited by hydraulic capacity.

LIFTING CAPACITY

Rating over-front | Rating over-side or 360 degrees

HX145LCR

Boom: 4.6 m (15' 1") / Arm: 3.0 m (9' 10") / Bucket: 0.52 m³ (0.68 yd³) SAE heaped / Shoe: 600 mm (24") triple grouser with 2,800 kg (6,170 lb) counterweight.

Load point height m (ft)		Load radius										At max. reach		
		1.5 m (5 ft)		3.0 m (10 ft)		4.5 m (15 ft)		6.0 m (20 ft)		7.5 m (25 ft)		Capacity		Reach
														m (ft)
6.0 m	kg					*2580	*2580	*1710	*1710			*2610	1510	7.07
(20 ft)	lb					*5690	*5690	*3770	*3770			*5750	3330	(23.2)
4.5 m	kg					*2790	*2790	*2570	2050			2150	1170	7.86
(15 ft)	lb					*6150	*6150	*5670	4520			4740	2580	(25.8)
3.0 m	kg			*3770	*3770	*3740	3270	*3240	1950	*1390	1230	1920	1010	8.27
(10 ft)	lb			*8310	*8310	*8250	7210	*7140	4300	*3060	2710	4230	2230	(27.1)
1.5 m	kg			*7770	5770	*5040	2970	3280	1820	*1960	1180	1850	960	8.36
(5 ft)	lb			*17130	12720	*11110	6550	7230	4010	*4320	2600	4080	2120	(27.4)
Ground Line	kg			*9190	5170	5060	2720	3150	1700	*1780	1130	1910	980	8.14
	lb			*20260	11400	11160	6000	6940	3750	*3920	2490	4210	2160	(26.7)
-1.5 m	kg	*5400	*5400	*9050	4970	4900	2580	3060	1630			2140	1120	7.59
(-5 ft)	lb	*11900	*11900	*19950	10960	10800	5690	6750	3590			4720	2470	(24.9)
-3.0 m	kg	*7890	*7890	*7760	4990	4870	2560	3070	1630			*2470	1460	6.59
(-10 ft)	lb	*17390	*17390	*17110	11000	10740	5640	6770	3590			*5450	3220	(21.6)
-4.5 m	kg			*5120	*5120	*3220	2670							
(-15 ft)	lb			*11290	*11290	*7100	5890							

Boom: 4.6 m (15' 1") / Arm: 1.9 m (6' 3") / Bucket: 0.52 m³ (0.68 yd³) SAE heaped /
Shoe: 600 mm (24") triple grouser with 2,800 kg (6,170 lb) counterweight. Dozer Blade up

Load point height m (ft)		Load radius								At max. reach		
		1.5 m (5 ft)		3.0 m (10 ft)		4.5 m (15 ft)		6.0 m (20 ft)		Capacity		Reach
												m (ft)
6.0 m	kg					*3240	*3240			*3720	2340	5.75
(20 ft)	lb					*7140	*7140			*8200	5160	(18.9)
4.5 m	kg			*5040	*5040	*4330	3530			2950	1720	6.73
(15 ft)	lb			*11110	*11110	*9550	7780			6500	3790	(22.1)
3.0 m	kg			*7250	6450	*5010	3330	3500	2040	2570	1460	7.22
(10 ft)	lb			*15980	14220	*11050	7340	7720	4500	5670	3220	(23.7)
1.5 m	kg			*9050	5700	5450	3080	3400	1950	2460	1380	7.32
(5 ft)	lb			*19950	12570	12020	6790	7500	4300	5420	3040	(24.0)
Ground Line	kg			*8630	5450	5260	2910	3320	1870	2580	1450	7.06
	lb			*19030	12020	11600	6420	7320	4120	5690	3200	(23.2)
-1.5 m	kg	*6890	*6890	*8100	5450	5200	2860			3030	1720	6.40
(-5 ft)	lb	*15190	*15190	*17860	12020	11460	6310			6680	3790	(21.0)
-3.0 m	kg			*5970	5590	*4070	2930			*2250	*2250	5.12
(-10 ft)	lb			*13160	12320	*8970	6460			*4960	*4960	(16.8)

Boom: 4.6 m (15' 1") / Arm: 1.9 m (6' 3") / Bucket: 0.52 m³ (0.68 yd³) SAE heaped /
Shoe: 600 mm (24") triple grouser with 2,800 kg (6,170 lb) counterweight. Dozer Blade down

Load point height m (ft)		Load radius								At max. reach		
		1.5 m (5 ft)		3.0 m (10 ft)		4.5 m (15 ft)		6.0 m (20 ft)		Capacity		Reach
												m (ft)
6.0 m	kg					*3240	*3240			*3720	2610	5.75
(20 ft)	lb					*7140	*7140			*8200	5750	(18.9)
4.5 m	kg			*5040	*5040	*4330	3930			*3560	1930	6.73
(15 ft)	lb			*11110	*11110	*9550	8660			*7850	4250	(22.1)
3.0 m	kg			*7250	*7250	*5010	3730	*4060	2290	*3490	1660	7.22
(10 ft)	lb			*15980	*15980	*11050	8220	*8950	5050	*7690	3660	(23.7)
1.5 m	kg			*9050	6550	*5750	3470	*4300	2200	*3440	1570	7.32
(5 ft)	lb			*19950	14440	*12680	7650	*9480	4850	*7580	3460	(24.0)
Ground Line	kg			*8630	6290	*6020	3300	*4320	2120	*3340	1650	7.06
	lb			*19030	13870	*13270	7280	*9520	4670	*7360	3640	(23.2)
-1.5 m	kg	*6890	*6890	*8100	6290	*5580	3250			*3080	3940	6.40
(-5 ft)	lb	*15190	*15190	*17860	13870	*12300	7170			*6790	4280	(21.0)
-3.0 m	kg			*5970	*5970	*4070	3320			*2250	*2250	5.12
(-10 ft)	lb			*13160	*13160	*8970	7320			*4960	*4960	(16.8)

1. Lifting capacity are based on SAE J1097 and ISO 10567.
2. Lifting capacity of the HX series does not exceed 75% of tipping load with the machine on firm, level ground or 87% of full hydraulic capacity.
3. The load point is a hook (standard equipment) located on the back of the bucket.
4. (*) indicates load limited by hydraulic capacity.

LIFTING CAPACITY

Rating over-front | Rating over-side or 360 degrees

HX145LCR

Boom: 4.6 m (15' 1") / Arm: 2.1 m (6' 11") / Bucket: 0.52 m³ (0.68 yd³) SAE heaped /
Shoe: 600 mm (24") triple grouser with 2,800 kg (6,170 lb) counterweight. Dozer Blade up

Load point height m (ft)		Load radius								At max. reach		
		1.5 m (5 ft)		3.0 m (10 ft)		4.5 m (15 ft)		6.0 m (20 ft)		Capacity		Reach
												m (ft)
6.0 m	kg					*3440	*3440			*3550	2200	5.98
(20 ft)	lb					*7580	*7580			*7830	4850	(19.6)
4.5 m	kg			*4410	*4410	*4150	3550	*2550	2110	2810	1640	6.92
(15 ft)	lb			*9720	*9720	*9150	7830	*5620	4650	6190	3620	(22.7)
3.0 m	kg			*6880	6530	*4840	3340	3510	2040	2460	1400	7.39
(10 ft)	lb			*15170	14400	*10670	7360	7740	4500	5420	3090	(24.2)
1.5 m	kg			*9010	5750	5450	3080	3400	1940	2360	1320	7.49
(5 ft)	lb			*19860	12680	12020	6790	7500	4280	5200	2910	(24.6)
Ground	kg			*8880	5420	5240	2890	3300	1850	2460	1370	7.24
Line	lb			*19580	11950	11550	6370	7280	4080	5420	3020	(23.8)
-1.5 m	kg	*6570	*6570	*8330	5390	5160	2820	3270	1830	2860	1610	6.60
(-5 ft)	lb	*14480	*14480	*18360	11880	11380	6220	7210	4030	6310	3550	(21.7)
-3.0 m	kg	*9010	*9010	*6340	5510	*4340	2870			*2390	2290	5.38
(-10 ft)	lb	*19860	*19860	*13980	12150	*9570	6330			*5270	5050	(17.7)

Boom: 4.6 m (15' 1") / Arm: 2.1 m (6' 11") / Bucket: 0.52 m³ (0.68 yd³) SAE heaped /
Shoe: 600 mm (24") triple grouser with 2,800 kg (6,170 lb) counterweight. Dozer Blade down

Load point height m (ft)		Load radius								At max. reach		
		1.5 m (5 ft)		3.0 m (10 ft)		4.5 m (15 ft)		6.0 m (20 ft)		Capacity		Reach
												m (ft)
6.0 m	kg					*3440	*3440			*3550	2460	5.98
(20 ft)	lb					*7580	*7580			*7830	5420	(19.6)
4.5 m	kg			*4410	*4410	*4150	3960	*2550	2360	*3420	1840	6.92
(15 ft)	lb			*9720	*9720	*9150	8730	*5620	5200	*7540	4060	(22.7)
3.0 m	kg			*6880	*6880	*4840	3740	*3960	2300	*3370	1590	7.39
(10 ft)	lb			*15170	*15170	*10670	8250	*8730	5070	*7430	3510	(24.2)
1.5 m	kg			*9010	6600	*5630	3470	*4230	2190	*3330	1500	7.49
(5 ft)	lb			*19860	14550	*12410	7650	*9330	4830	*7340	3310	(24.6)
Ground	kg			*8880	6260	*5990	3280	*4320	2100	*3260	1570	7.24
Line	lb			*19580	13800	*13210	7230	*9520	4630	*7190	3460	(23.8)
-1.5 m	kg	*6570	*6570	*8330	6230	*5650	3210	*3890	2080	*3050	1830	6.60
(-5 ft)	lb	*14480	*14480	*18360	13730	*12460	7080	*8580	4590	*6720	4030	(21.7)
-3.0 m	kg	*9010	*9010	*6340	*6340	*4340	3260			*2390	*2390	5.38
(-10 ft)	lb	*19860	*19860	*13980	*13980	*9570	7190			*5270	*5270	(17.7)

Boom: 4.6 m (15' 1") / Arm: 2.5 m (8' 2") / Bucket: 0.52 m³ (0.68 yd³) SAE heaped /
Shoe: 600 mm (24") triple grouser with 2,800 kg (6,170 lb) counterweight. Dozer Blade up

Load point height m (ft)		Load radius								At max. reach		
		1.5 m (5 ft)		3.0 m (10 ft)		4.5 m (15 ft)		6.0 m (20 ft)		Capacity		Reach
												m (ft)
6.0 m	kg					*2970	*2970			*2920	1880	6.50
(20 ft)	lb					*6550	*6550			*6440	4140	(21.3)
4.5 m	kg					*3490	*3490	*2670	2130	2510	1430	7.37
(15 ft)	lb					*7690	*7690	*5890	4700	5530	3150	(24.2)
3.0 m	kg			*6120	*6120	*4490	3370	3520	2040	2220	1240	7.81
(10 ft)	lb			*13490	*13490	*9900	7430	7760	4500	4890	2730	(25.6)
1.5 m	kg			*8490	5870	*5370	3090	3390	1930	2140	1170	7.90
(5 ft)	lb			*18720	12940	*11840	6810	7470	4250	4720	2580	(25.9)
Ground	kg			*9170	5410	5220	2870	3270	1820	2220	1210	7.67
Line	lb			*20220	11930	11510	6330	7210	4010	4890	2670	(25.2)
-1.5 m	kg	*5870	*5870	*8690	5310	5110	2770	3220	1770	2530	1400	7.07
(-5 ft)	lb	*12940	*12940	*19160	11710	11270	6110	7100	3900	5580	3090	(23.2)
-3.0 m	kg	*8960	*8960	*7010	5390	*4760	2790			*2400	1890	5.97
(-10 ft)	lb	*19750	*19750	*15450	11880	*10490	6150			*5290	4170	(19.6)
-4.5 m	kg			*3710	*3710							
(-15 ft)	lb			*8180	*8180							

1. Lifting capacity are based on SAE J1097 and ISO 10567.
2. Lifting capacity of the HX series does not exceed 75% of tipping load with the machine on firm, level ground or 87% of full hydraulic capacity.
3. The load point is a hook (standard equipment) located on the back of the bucket.
4. (*) indicates load limited by hydraulic capacity.

LIFTING CAPACITY

Rating over-front | Rating over-side or 360 degrees

HX145LCR

Boom: 4.6 m (15' 1") / Arm: 2.5 m (8' 2") / Bucket: 0.52 m³ (0.68 yd³) SAE heaped /
Shoe: 600 mm (24") triple grouser with 2,800 kg (6,170 lb) counterweight. Dozer Blade down

Load point height m (ft)		Load radius								At max. reach		
		1.5 m (5 ft)		3.0 m (10 ft)		4.5 m (15 ft)		6.0 m (20 ft)		Capacity		Reach
												m (ft)
6.0 m	kg					*2970	*2970			*2920	2100	6.50
(20 ft)	lb					*6550	*6550			*6440	4630	(21.3)
4.5 m	kg					*3490	*3490	*2670	2380	*2760	1630	7.37
(15 ft)	lb					*7690	*7690	*5890	5250	*6080	3590	(24.2)
3.0 m	kg			*6120	*6120	*4490	3780	*3700	2300	*2760	1410	7.81
(10 ft)	lb			*13490	*13490	*9900	8330	*8160	5070	*6080	3110	(25.6)
1.5 m	kg			*8490	6720	*5370	3490	*4080	2180	*2880	1340	7.90
(5 ft)	lb			*18720	14820	*11840	7690	*8990	4810	*6350	2950	(25.9)
Ground	kg			*9170	6250	*5890	3260	*4260	2070	*3020	1390	7.67
Line	lb			*20220	13780	*12990	7190	*9390	4560	*6660	3060	(25.2)
-1.5 m	kg	*5870	*5870	*8690	6140	*5750	3160	*4040	2020	*2860	1600	7.07
(-5 ft)	lb	*12940	*12940	*19160	13540	*12680	6970	*8910	4450	*6310	3530	(23.2)
-3.0 m	kg	*8960	*8960	*7010	6220	*4760	3180			*2400	2150	5.97
(-10 ft)	lb	*19750	*19750	*15450	13710	*10490	7010			*5290	4740	(19.6)
-4.5 m	kg			*3710	*3710							
(-15 ft)	lb			*8180	*8180							

Boom: 4.6 m (15' 1") / Arm: 3.0 m (9' 10") / Bucket: 0.52 m³ (0.68 yd³) SAE heaped /
Shoe: 600 mm (24") triple grouser with 2,800 kg (6,170 lb) counterweight. Dozer Blade up

Load point height m (ft)		Load radius										At max. reach		
		1.5 m (5 ft)		3.0 m (10 ft)		4.5 m (15 ft)		6.0 m (20 ft)		7.5 m (25 ft)		Capacity		Reach
														m (ft)
6.0 m	kg					*2580	*2580	*1710	*1710			*2610	1620	7.07
(20 ft)	lb					*5690	*5690	*3770	*3770			*5750	3570	(23.2)
4.5 m	kg					*2790	*2790	*2570	2180			2250	1270	7.86
(15 ft)	lb					*6150	*6150	*5670	4810			4960	2800	(25.8)
3.0 m	kg			*3770	*3770	*3740	3460	*3240	2080	*1390	1330	2010	1100	8.27
(10 ft)	lb			*8310	*8310	*8250	7630	*7140	4590	*3060	2930	4430	2430	(27.1)
1.5 m	kg			*7770	6110	*5040	3160	3420	1950	*1960	1280	1940	1040	8.36
(5 ft)	lb			*17130	13470	*11110	6970	7540	4300	*4320	2820	4280	2290	(27.4)
Ground	kg			*9190	5510	5270	2910	3280	1830	*1780	1230	2000	1070	8.14
Line	lb			*20260	12150	11620	6420	7230	4030	*3920	2710	4410	2360	(26.7)
-1.5 m	kg	*5400	*5400	*9050	5310	5110	2770	3200	1760			2240	1220	7.59
(-5 ft)	lb	*11900	*11900	*19950	11710	11270	6110	7050	3880			4940	2690	(24.9)
-3.0 m	kg	*7890	*7890	*7760	5320	5080	2750	3200	1760			*2470	1580	6.59
(-10 ft)	lb	*17390	*17390	*17110	11730	11200	6060	7050	3880			*5450	3480	(21.6)
-4.5 m	kg			*5120	*5120	*3220	2860							
(-15 ft)	lb			*11290	*11290	*7100	6310							

Boom: 4.6 m (15' 1") / Arm: 3.0 m (9' 10") / Bucket: 0.52 m³ (0.68 yd³) SAE heaped /
Shoe: 600 mm (24") triple grouser with 2,800 kg (6,170 lb) counterweight. Dozer Blade down

Load point height m (ft)		Load radius										At max. reach		
		1.5 m (5 ft)		3.0 m (10 ft)		4.5 m (15 ft)		6.0 m (20 ft)		7.5 m (25 ft)		Capacity		Reach
														m (ft)
6.0 m	kg					*2580	*2580	*1710	*1710			*2610	1820	7.07
(20 ft)	lb					*5690	*5690	*3770	*3770			*5750	4010	(23.2)
4.5 m	kg					*2790	*2790	*2570	2440			*2490	1440	7.86
(15 ft)	lb					*6150	*6150	*5670	5380			*5490	3170	(25.8)
3.0 m	kg			*3770	*3770	*3740	*3740	*3240	2340	*1390	*1390	*2490	1270	8.27
(10 ft)	lb			*8310	*8310	*8250	*8250	*7140	5160	*3060	*3060	*5490	2800	(27.1)
1.5 m	kg			*7770	6980	*5040	3560	*3890	2210	*1960	1470	*2610	1200	8.36
(5 ft)	lb			*17130	15390	*11110	7850	*8580	4870	*4320	3240	*5750	2650	(27.4)
Ground	kg			*9190	6350	*5750	3300	*4200	2080	*1780	1420	*2830	1240	8.14
Line	lb			*20260	14000	*12680	7280	*9260	4590	*3920	3130	*6240	2730	(26.7)
-1.5 m	kg	*5400	*5400	*9050	6140	*5850	3160	*4160	2010			*2740	1400	7.59
(-5 ft)	lb	*11900	*11900	*19950	13540	*12900	6970	*9170	4430			*6040	3090	(24.9)
-3.0 m	kg	*7890	*7890	*7760	6160	*5180	3140	*3470	2010			*2470	1800	6.59
(-10 ft)	lb	*17390	*17390	*17110	13580	*11420	6920	*7650	4430			*5450	3970	(21.6)
-4.5 m	kg			*5120	*5120	*3220	*3220							
(-15 ft)	lb			*11290	*11290	*7100	*7100							

LIFTING CAPACITY

Rating over-front | Rating over-side or 360 degrees

HX145LCR 2-PIECE BOOM

Boom: 4.9 m (16' 1") / Arm: 2.1 m (6' 11") / Bucket: 0.52 m³ (0.68 yd³) SAE heaped / Shoe: 600 mm (24") triple grouser with 2,800 kg (6,170 lb) counterweight.

Load point height m (ft)		Load radius								At max. reach		
		1.5 m (5 ft)		3.0 m (10 ft)		4.5 m (15 ft)		6.0 m (20 ft)		Capacity		Reach
												m (ft)
6.0 m	kg	*3480	*3480	*3700	*3700	*3490	3470			3100	1770	6.46
(20 ft)	lb	*7670	*7670	*8160	*8160	*7690	7650			6830	3900	(21.2)
4.5 m	kg	*3410	*3410	*4460	*4460	*3800	3350	*3410	1980	2430	1330	7.33
(15 ft)	lb	*7520	*7520	*9830	*9830	*8380	7390	*7520	4370	5360	2930	(24.0)
3.0 m	kg			*6790	5990	*4560	3090	3360	1880	2140	1140	7.77
(10 ft)	lb			*14970	13210	*10050	6810	7410	4140	4720	2510	(25.5)
1.5 m	kg					5170	2790	3230	1760	2060	1070	7.87
(5 ft)	lb					11400	6150	7120	3880	4540	2360	(25.8)
Ground	kg			*5960	4890	4950	2600	3120	1660	2140	1110	7.63
Line	lb			*13140	10780	10910	5730	6880	3660	4720	2450	(25.0)
-1.5 m	kg			*8260	4900	4880	2540	3080	1620			
(-5 ft)	lb			*18210	10800	10760	5600	6790	3570			

Boom: 4.9 m (16' 1") / Arm: 2.5 m (8' 2") / Bucket: 0.52 m³ (0.68 yd³) SAE heaped / Shoe: 600 mm (24") triple grouser with 2,800 kg (6,170 lb) counterweight.

Load point height m (ft)		Load radius										At max. reach		
		1.5 m (5 ft)		3.0 m (10 ft)		4.5 m (15 ft)		6.0 m (20 ft)		7.5 m (25 ft)		Capacity		Reach
														m (ft)
6.0 m	kg	*2640	*2640	*3000	*3000	*3110	*3110	*1990	*1990			2700	1510	6.96
(20 ft)	lb	*5820	*5820	*6610	*6610	*6860	*6860	*4390	*4390			5950	3330	(22.8)
4.5 m	kg	*2270	*2270	*3170	*3170	*3440	3390	*3140	1990			2170	1160	7.77
(15 ft)	lb	*5000	*5000	*6990	*6990	*7580	7470	*6920	4390			4780	2560	(25.5)
3.0 m	kg			*6030	*6030	*4220	3120	3370	1880			1930	1000	8.18
(10 ft)	lb			*13290	*13290	*9300	6880	7430	4140			4250	2200	(26.8)
1.5 m	kg			*7680	5260	*5120	2800	3210	1740	2190	1140	1860	940	8.27
(5 ft)	lb			*16930	11600	*11290	6170	7080	3840	4830	2510	4100	2070	(27.1)
Ground	kg			*6290	4850	4930	2570	3090	1620			1920	970	8.05
Line	lb			*13870	10690	10870	5670	6810	3570			4230	2140	(26.4)
-1.5 m	kg			*8510	4800	4810	2470	3020	1570			2170	1120	7.49
(-5 ft)	lb			*18760	10580	10600	5450	6660	3460			4780	2470	(24.6)
-3.0 m	kg					4840	2500							
(-10 ft)	lb					10670	5510							

Boom: 4.9 m (16' 1") / Arm: 2.1 m (6' 11") / Bucket: 0.52 m³ (0.68 yd³) SAE heaped /
Shoe: 600 mm (24") triple grouser with 2,800 kg (6,170 lb) counterweight. Dozer Blade up

Load point height m (ft)		Load radius								At max. reach		
		1.5 m (5 ft)		3.0 m (10 ft)		4.5 m (15 ft)		6.0 m (20 ft)		Capacity		Reach
												m (ft)
6.0 m	kg	*3480	*3480	*3700	*3700	*3490	*3490			*3150	1890	6.46
(20 ft)	lb	*7670	*7670	*8160	*8160	*7690	*7690			*6940	4170	(21.2)
4.5 m	kg	*3410	*3410	*4460	*4460	*3800	3540	*3410	2110	2540	1440	7.33
(15 ft)	lb	*7520	*7520	*9830	*9830	*8380	7800	*7520	4650	5600	1370	(24.0)
3.0 m	kg			*6790	6330	*4560	3280	3500	2010	2240	1240	7.77
(10 ft)	lb			*14970	13960	*10050	7230	7720	4430	4940	2730	(25.5)
1.5 m	kg					5380	2980	3370	1890	2160	1170	7.87
(5 ft)	lb					11860	6570	7430	4170	4760	2580	(25.8)
Ground	kg			*5960	5230	5160	2790	3260	1790	2240	1210	7.63
Line	lb			*13140	11530	11380	6150	7190	3950	4940	2670	(25.0)
-1.5 m	kg			*8260	5240	5080	2720	3220	1760			
(-5 ft)	lb			*18210	11550	11200	6000	7100	3880			

1. Lifting capacity are based on SAE J1097 and ISO 10567.
2. Lifting capacity of the HX series does not exceed 75% of tipping load with the machine on firm, level ground or 87% of full hydraulic capacity.
3. The load point is a hook (standard equipment) located on the back of the bucket.
4. (*) indicates load limited by hydraulic capacity.

LIFTING CAPACITY

Rating over-front | Rating over-side or 360 degrees

HX145LCR 2-PIECE BOOM

Boom: 4.9 m (16' 1") / Arm: 2.1 m (6' 11") / Bucket: 0.52 m³ (0.68 yd³) SAE heaped /
Shoe: 600 mm (24") triple grouser with 2,800 kg (6,170 lb) counterweight. Dozer Blade down

Load point height m (ft)		Load radius								At max. reach		
		1.5 m (5 ft)		3.0 m (10 ft)		4.5 m (15 ft)		6.0 m (20 ft)		Capacity		Reach
												m (ft)
6.0 m	kg	*3480	*3480	*3700	*3700	*3490	*3490			*3150	2120	6.46
(20 ft)	lb	*7670	*7670	*8160	*8160	*7690	*7690			*6940	4670	(21.2)
4.5 m	kg	*3410	*3410	*4460	*4460	*3800	*3800	*3410	2370	*3070	1630	7.33
(15 ft)	lb	*7520	*7520	*9830	*9830	*8380	*8380	*7520	5220	*6770	3590	(24.0)
3.0 m	kg			*6790	*6790	*4560	3680	*3670	2270	*3060	1420	7.77
(10 ft)	lb			*14970	*14970	*10050	8110	*8090	5000	*6750	3130	(25.5)
1.5 m	kg					*5380	3380	*4010	2140	*3060	1340	7.87
(5 ft)	lb					*11860	7450	*8840	4720	*6750	2950	(25.8)
Ground	kg			*5960	*5960	*5800	3180	*4200	2050	*3050	1400	7.63
Line	lb			*13140	*13140	*12790	7010	*9260	4520	*6720	3090	(25.0)
-1.5 m	kg			*8260	6080	*5630	3120	*4010	2010			
(-5 ft)	lb			*18210	13400	*12410	6880	*8840	4430			

Boom: 4.9 m (16' 1") / Arm: 2.5 m (8' 2") / Bucket: 0.52 m³ (0.68 yd³) SAE heaped /
Shoe: 600 mm (24") triple grouser with 2,800 kg (6,170 lb) counterweight. Dozer Blade up

Load point height m (ft)		Load radius										At max. reach		
		1.5 m (5 ft)		3.0 m (10 ft)		4.5 m (15 ft)		6.0 m (20 ft)		7.5 m (25 ft)		Capacity		Reach
														m (ft)
6.0 m	kg	*2640	*2640	*3000	*3000	*3110	*3110	*1990	*1990			2820	1630	6.96
(20 ft)	lb	*5820	*5820	*6610	*6610	*6860	*6860	*4390	*4390			6220	3590	(22.8)
4.5 m	kg	*2280	*2280	*3180	*3180	*3450	*3450	*3150	2120			2280	1260	7.77
(15 ft)	lb	*5030	*5030	*7010	*7010	*7610	*7610	*6940	4670			5030	2780	(25.5)
3.0 m	kg			*6030	*6030	*4230	3310	*3450	2010			2030	1090	8.18
(10 ft)	lb			*13290	*13290	*9330	7300	*7610	4430			4480	2400	(26.8)
1.5 m	kg			*7680	5600	*5120	3000	3360	1880	*2260	1240	1950	1030	8.27
(5 ft)	lb			*16930	12350	*11290	6610	7410	4140	*4980	2730	4300	2270	(27.1)
Ground	kg			*6290	5200	5140	2760	3230	1760			2020	1070	8.05
Line	lb			*13870	11460	11330	6080	7120	3880			4450	2360	(26.4)
-1.5 m	kg			*8510	5140	5030	2670	3160	1700			2280	1220	7.49
(-5 ft)	lb			*18760	11330	11090	5890	6970	3750			5030	2690	(24.6)
-3.0 m	kg					*4990	2690							
(-10 ft)	lb					*11000	5930							

Boom: 4.9 m (16' 1") / Arm: 2.5 m (8' 2") / Bucket: 0.52 m³ (0.68 yd³) SAE heaped /
Shoe: 600 mm (24") triple grouser with 2,800 kg (6,170 lb) counterweight. Dozer Blade down

Load point height m (ft)		Load radius										At max. reach		
		1.5 m (5 ft)		3.0 m (10 ft)		4.5 m (15 ft)		6.0 m (20 ft)		7.5 m (25 ft)		Capacity		Reach
														m (ft)
6.0 m	kg	*2640	*2640	*3000	*3000	*3110	*3110	*1990	*1990			*2890	1840	6.96
(20 ft)	lb	*5820	*5820	*6610	*6610	*6860	*6860	*4390	*4390			*6370	4060	(22.8)
4.5 m	kg	*2280	*2280	*3180	*3180	*3450	*3450	*3150	2390			*2830	1440	7.77
(15 ft)	lb	*5030	*5030	*7010	*7010	*7610	*7610	*6940	5270			*6240	3170	(25.5)
3.0 m	kg			*6030	*6030	*4230	3730	*3450	2270			*2820	1260	8.18
(10 ft)	lb			*13290	*13290	*9330	8220	*7610	5000			*6220	2780	(26.8)
1.5 m	kg			*7680	6460	*5120	3400	*3840	2130	*2260	1430	*2830	1200	8.27
(5 ft)	lb			*16930	14240	*11290	7500	*8470	4700	*4980	3150	*6240	2650	(27.1)
Ground	kg			*6290	6030	*5680	3160	*4110	2010			*2820	1240	8.05
Line	lb			*13870	13290	*12520	6970	*9060	4430			*6220	2730	(26.4)
-1.5 m	kg			*8510	5980	*5670	3060	*4060	1960			*2750	1410	7.49
(-5 ft)	lb			*18760	13180	*12500	6750	*8950	4320			*6060	3110	(24.6)
-3.0 m	kg					*4990	3080							
(-10 ft)	lb					*11000	6790							

1. Lifting capacity are based on SAE J1097 and ISO 10567.
2. Lifting capacity of the HX series does not exceed 75% of tipping load with the machine on firm, level ground or 87% of full hydraulic capacity.
3. The load point is a hook (standard equipment) located on the back of the bucket.
4. (*) indicates load limited by hydraulic capacity.

NOTES

NOTES

ENGINE	STD	OPT
Perkins 1204F engine	●	
HYDRAULIC SYSTEM		
Intelligent Power Control (IPC)		
3-power mode, 2-work mode, user mode	●	
Variable Power Control	●	
Pump Flow Control	●	
Attachment Mode Flow Control		●
Engine Auto Idle	●	
Engine Auto Shutdown Control		●
Electronic Fan Control	●	
CABIN & INTERIOR		
ISO Standard cabin		
Rise-up type windshield wiper	●	
Radio / USB player	●	
Handsfree mobile phone system with USB	●	
12 volt power outlet (24V DC to 12V DC converter)	●	
Electric horn	●	
All-weather steel cab with 360° visibility	●	
Safety glass windows	●	
Sliding fold-in front window	●	
Sliding side window (LH)	●	
Lockable door	●	
Hot & cool box	●	
Storage compartment & Ashtray	●	
Transparent cabin roof-cover	●	
Sun visor	●	
Door and cab locks, one key	●	
Mechanical suspension seat with heater	●	
Pilot-operated slidable joystick	●	
Console box height adjust system	●	
Automatic climate control		
Air conditioner & heater	●	
Defroster	●	
Starting Aid (air grid heater) for cold weather	●	
Centralized monitoring		
8" LCD display	●	
Engine speed or Trip meter/Accel.	●	
Engine coolant temperature gauge	●	
Max power	●	
Low speed/High speed	●	
Auto idle	●	
Overload	●	
Check Engine	●	
Air cleaner clogging	●	
Indicators	●	
ECO Gauges	●	
Fuel level gauge	●	
Hyd. oil temperature gauge	●	
Warnings	●	
Communication error	●	
Low battery	●	
Clock	●	
Cabin lights	●	
Cabin front window rain guard	●	
Seat		
Adjustable air suspension seat with heater		●
Cabin FOPS/FOG (ISO/DIS 10262) Level 2		
FOPS (Falling Object Protective Structure) · ISO 3449 Level 2		●
FOG (Falling Object Guard)		●
Cabin ROPS (ISO 12117-2)		
ROPS (Roll Over Protective Structure)	●	

SAFETY	STD	OPT
Battery master switch	●	
Rearview camera	●	
Four front working lights	●	
Travel alarm	●	
Rear work lamp		●
Beacon lamp		●
Automatic swing brake	●	
Boom holding system	●	
Arm holding system	●	
Safety lock valve for boom cylinder with overload warning device	●	
Safety lock valve for arm cylinder		●
Swing Lock System		●
Two outside rearview mirrors	●	
OTHER		
Booms		
4.6 m; 15' 1" Mono	●	
4.1 m m; 13' 5" Mono		●
4.9 m; 16' 1" 2-Piece		●
Arms		
1.9 m; 6' 3"		●
2.1 m; 6' 11"		●
2.5 m; 8' 2"	●	
3.0 m; 9' 11"		●
Removable clean-out dust net for cooler	●	
Removable reservoir tank	●	
Fuel pre-filter	●	
Self-diagnostics system	●	
Hi MATE (Remote Management System)	●	
Batteries (2 × 12 V × 100 Ah)	●	
Fuel filler pump (50 ℓ/min)	●	
Single-acting piping kit (breaker, etc.)		●
Double-acting piping kit (clamshell, etc.)	●	
Rotating Piping Kit		●
Quick coupler piping		●
Quick coupler		●
Accumulator for lowering work equipment	●	
Pattern change valve (2 patterns)		●
Fine Swing Control System		●
Tool kit		●
UNDERCARRIAGE		
Lower frame under cover (Additional)		●
Lower frame under cover (Normal)	●	
Track shoes		
Triple grouser shoe (600 mm; 24")	●	
Triple grouser shoe (700 mm; 28")		●
Track rail guard		●

STD = Standard
OPT = Optional

* Standard and optional equipment may vary. Contact your Hyundai dealer for more information. The machine may vary according to International standards.
* The photos may include attachments and optional equipment that are not available in your area.
* Materials and specifications are subject to change without advance notice.
* All imperial measurements rounded off to the nearest pound or inch.
* The air conditioning system on this machine contains the fluorinated greenhouse gas refrigerant HFC-134a (Global Warming Potential = 1430). The system contains 0.75 kg of refrigerant which has a CO_2 equivalent of 1.0725 metric tonne.

HYUNDAI CONSTRUCTION EQUIPMENT

PLEASE CONTACT

Hyundai Construction Equipment Europe nv
Hyundailaan 4, 3980 Tessenderlo, Belgium **Tel:** (32) 14-56-2200 **Fax:** (32) 14-59-3405 www.hyundai.eu

EN - 2017.11 Rev 2